ELECTRONIC PRESSURE AND TEMPERATURE SWITCHES

FEATURES

- Large digital gauge for status, process indication & diagnostic reporting
- 100% programmable set point & deadband for easy adjustment
- Solid-state design for high-vibration applications
- Explosion-proof, intrinsically safe and non-incendive models available for hazardous locations
- Suitable for SIL 1 & 2 safety systems
- Multiple approvals including:

UNITED ELECTRIC CONTROLS

OVERVIEW

United Electric Controls (UE) is renowned for high-quality workmanship and product design, and the *One Series* carries this 80-year tradition well beyond electromechanical switches. *UE's One Series* line of digital electronic pressure and temperature switches sets new standards for quality, reliability and versatility. Designed to meet the needs of harsh and hazardous applications, the *One Series'* advanced self-diagnostics and digital electronics provide the most reliable switches for a variety of diverse industries.

The *One Series from UE* allows you to choose from explosion-proof, intrinsically safe and non-incendive models that monitor gauge pressure, differential pressure or temperature. With up to two fully adjustable set points and deadbands, available 4-20 mA analog output, and absolutely no moving parts, these versatile instruments can now be used in a wide variety of applications where switches weren't previously considered. Featuring a solid-state design, *UE's One Series* is your best choice for tough applications with high cycle rates, vibration and shock. For plant upgrades, there are a variety of power options ranging from 2-wire discrete and analog loop-powered models to externally powered models that can switch up to 280 VAC at 10 amperes to the load.

With an integral digital display and 4-20 mA output, the *One Series from UE* can effectively do the job of three – replacing a switch, a gauge and a transmitter. Powerful yet easy to install, the *One Series from UE* features tamper-resistance, intuitive programming, and set-up that is fast and easy.

FEATURES

- Digital process display
- Programmable set point and deadband
- Self-diagnostic solid-state digital electronics
- Plug port detection
- Nuisance trip filtering
- Configurable IAW® self-diagnostics
- Min/Max process values memory
- 3-year warranty

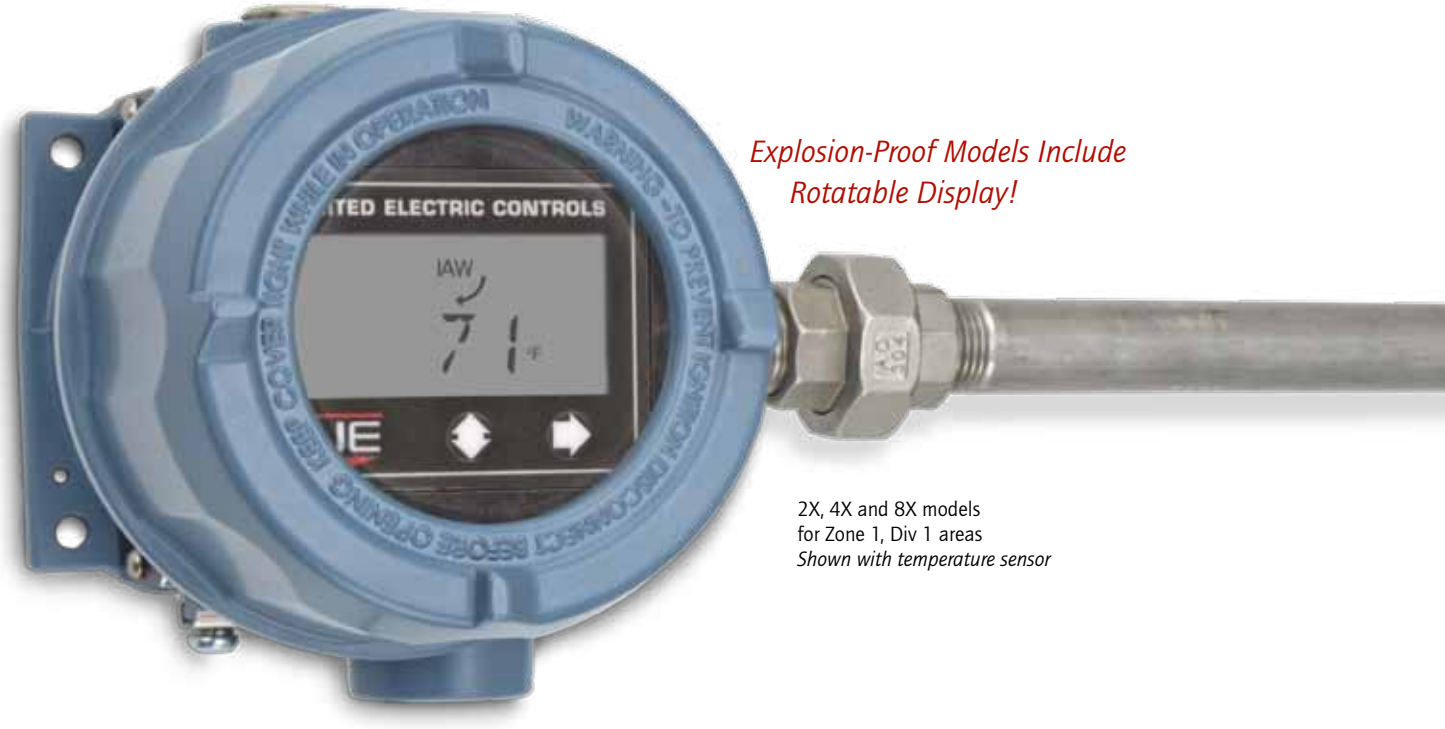

Explosion-Proof Models Include Rotatable Display!

2X, 4X and 8X models
for Zone 1, Div 1 areas
Shown with temperature sensor

INNOVATIVE DESIGN

The One Series' award-winning design provides numerous advances in alarm & shutdown switching technology.

POWER

Extremely low power consumption allows the One Series 2-Wire electronic switch to operate with no additional wiring or batteries. Power is obtained from the control system's discrete or analog input, making it ideal for plant upgrades from mechanical switches while using the same wiring and control schemes. For direct switching applications, powered versions of the One Series can provide 2 independent solid-state relays or handle a load of up to 10 amperes. Loop-powered models feature field-scalable 4-20 mA analog output in addition to a programmable solid-state relay, providing a switch + gauge + transmitter function all in one instrument.

PROGRAMMABILITY

The set point and deadband settings allow for 100% adjustability, providing highly repeatable trip and reset points for your application. This feature allows the One Series to be used in pump and compressor applications where high cycle rates may shorten the life of mechanical controls. Nuisance trips, switch delay, plugged port detection and process extremes are all easily programmable, making these application challenges manageable by the instrument, with no special programming needed for the PLC.

SELF-DIAGNOSTICS

Mechanical switches have no self-diagnostic capabilities – they are blind instruments. All One Series models include the patented IAW® (I Am Working) algorithm that can detect faults before they become process control problems. Detected faults are reported on the digital display while the switch will fail safe open and the 4-20 mA analog output saturates beyond 4 and 20 to provide remote fault indication. The intelligent and configurable IAW® diagnostics allow the SIL-2-suitable One Series to provide a significantly higher risk reduction factor than some safety transmitters in plant safety applications.

2W, 4W and 8W models
for Zone 2, Div 2 areas
Shown with differential pressure sensor

APPLICATION VERSATILITY

For alarm and shutdown switching applications, there is no better choice than the *One Series* family of electronic switches from United Electric Controls. Measuring gauge pressure, differential pressure or temperature, the extremely rugged and reliable *One Series* takes all of the guess-work out of monitoring process variables to prevent injury, loss and downtime. With its large digital display, fully-adjustable deadband, and 100% solid-state design, the *One Series* is the obvious choice for plant upgrades and new construction projects. A built-in microprocessor includes digital repeatability and intelligent self-diagnostics, offering plant operators an extremely reliable and smart protection device.

Proven in use in literally thousands of diverse applications, UE's explosion-proof *One Series* models extend this revolutionary switching technology to Zone 1 (Division 1) areas.

Here are just a few applications:

- Pumps and compressors – start/stop, optimizing, shutdown, staging
- Lubricating oil monitoring – sump temperature, bearing pressure, predictive maintenance
- Hydraulic oil pressure – high pressure monitoring, emergency shutdown, ram cycling
- Filter monitoring – automatic backwash, clog and change indication, proving flow
- Safety systems – safety integrity levels 1 & 2, alarm and shutdown, local switching, fast response time
- Plant upgrades – power and wastewater plant upgrades, drop-in replacement for mechanical switches

Gas Compressor Protection

Pump Emergency Shutdown

Lubrication Oil Monitoring

SPECIFICATIONS

Power input/ Switch output:

Model	Input Type (Range)	Max Switch Ratings (SPST)	Temperature Derating	Min. Load Requirement	Off State Leakage
2W2D00 2X2D00	2-Wire 24 VDC discrete input powered (12-30 VDC) @ 750 µA (max)	12-30 VDC @ 40 mA	NA	2.3 mA	0.75 mA maximum
2W4D00 2X4D00	2-Wire 48 VDC discrete input powered (30-50 VDC) @ 750 µA (max)	30-50 VDC @ 40 mA		2.0 mA	0.8 mA maximum
2W3A00 2X3A00	2-Wire 120 V discrete input powered (90-130 VAC/VDC) @ 1 mA	90-130 VAC/VDC @ 0.1 A		3.75 mA	1.0 mA maximum
2WLP41 2XLP41	2-Wire 24 VDC analog input loop powered (10-36 VDC) @ 4-20 mA	0-140 VAC/VDC @ 0.6 A	8% per 10°C above 21°C	0 mA	0.01 mA
2WLP43 2XLP43	2-Wire 24 VDC analog input loop powered (10-36 VDC) @ 4-20 mA	0-280 VAC/VDC @ 0.3 A			
4W3A01 4X3A01	4-Wire 120 VAC external power supply (90-130 VAC) @ 15mA	24-280 VAC @ 10 A	1.8 A per 10°C above 38°C	150 mA	0.1 mA
8W2D42 8X2D42	8-Wire 24 VDC external power supply (10-30 VDC) @ 30 mA	SW1: 75-250 VAC @ 1.5 A SW2: 75-250 VAC @ 1.5 A	10% per 10°C above 21°C	50mA	5 mA
8W2D44 8X2D44	8-wire 24 VDC external power supply (10-30 VDC) @ 30 mA	SW1: 75-250 VAC @ 1.5 A SW2: 0-140 VAC/VDC @ 0.6 A	8% per 10°C above 21°C	0 mA	0.01 mA
8W2D45 8X2D45	8-wire 24 VDC external power supply (10-30 VDC) @ 30 mA	SW1: 0-140 VAC/VDC @ 0.6 A SW2: 0-140 VAC/VDC @ 0.6 A			

Accuracy: 0.5% of full range span, at room temperature

Repeatability: 0.1% of full range span

Ambient operating temperature range:

	Approved Ambient Operating Temperature Range			
	cULus (Division System)		cULus & ATEX (Zone System)	
2W2D	-40°F (-40°C)	185°F (85°C)	-40°F (-40°C)	140°F (60°C)
2W4D	NA	NA	NA	NA
2WLP	-40°F (-40°C)	176°F (80°C)	-40°F (-40°C)	140°F (60°C)
2W3A	-40°F (-40°C)	185°F (85°C)	-40°F (-40°C)	140°F (60°C)
4W3A	-40°F (-40°C)	158°F (70°C)	-40°F (-40°C)	140°F (60°C)
8W2D	-40°F (-40°C)	176°F (80°C)	-40°F (-40°C)	140°F (60°C)
2X2D	-40°F (-40°C)	185°F (85°C)	-40°F (-40°C)	185°F (85°C)
2X4D	-40°F (-40°C)	185°F (85°C)	-40°F (-40°C)	185°F (85°C)
2XLP	-40°F (-40°C)	176°F (80°C)	-40°F (-40°C)	176°F (80°C)
2X3A	-40°F (-40°C)	185°F (85°C)	-40°F (-40°C)	185°F (85°C)
4X3A	-40°F (-40°C)	158°F (70°C)	-40°F (-40°C)	158°F (70°C)
8X2D	-40°F (-40°C)	176°F (80°C)	-40°F (-40°C)	176°F (80°C)

Display operating temperature range: 10°F (-12°C) 158°F (70°C)

SPECIFICATIONS (CONTINUED)

Long-term stability: ±0.25% of range/year maximum

Temperature drift: 0.03% of full scale per °C (0.12% for the K10 range)

Switch response time: "Change-of-output" response ≤ 60 mS (16.7 Hz) (for detection of full step change and change of output state, delay feature off)

Display response time: 400 mS (2.5 Hz)

Transient filtering: Programmable time constants between 250 mS and 2 seconds in 2X increments

Diagnostics (IAW®): Open or shorted sensor; plugged port; power supply out of range; over and under-range conditions; microprocessor faults/failure; keypad short; switch fault

Output states: Field selectable for 2-state or 3-state operation.
Pulse rates vary by model. Fast and slow rates are selectable. See installation manual for details.

Control modes: Field-configuration solid-state switch action with programmable manual reset

Mode	Action	Fault
2-state		
Normally closed	Open on rising media	Open
Normally open	Close on rising media	Open
Normally closed	Open on falling media	Open
Normally open	Close on falling media	Open
3-state		
Normally closed	Pulse on rising media	Open
Normally closed	Pulse on falling media	Open

Analog output: 4-20 mA output, 700 ohms max. at 24 VDC, Field scalable, 2:1 turn down. Various faults are indicated at 0, 3.5, 22 and 24 mA. See installation manual for details. (2WLP, 2XLP, 8W2D, 8X2D models only)

Electrical characteristics:
(2-wire models only)

		Switch State (Max.)	
Model		Voltage Open	Voltage Closed
2W2D	2X2D	12-30 VDC @ 750 µA	4.7 VDC @ 40 mA
2W4D	2X4D	30-50 VDC @ 1mA	5.0 VDC @ 40 mA
2W3A	2X3A	90-130 VAC/VDC @ 1 mA	13 VAC/VDC @ 100 mA

Enclosure: Type 4X/IP66 certified epoxy-coated aluminum alloy 360 for 2X, 4X and 8X models and alloy 380 for 2W, 4W and 8W.

Faceplate: UV-resistant pressure sensitive keypad and display overlay

Cover: Epoxy-coated aluminum with tempered glass insert (explosion-proof models only)

Conduit: 1/2" NPT female stainless steel fitting; 3/4" NPT female aluminum casting (explosion-proof models only)

SPECIFICATIONS (CONTINUED)

Display:

- Local 4 digit x 0.5" LCD
- IAW® (I Am Working) status
- Process variable
- Units of measure
- Switch status
- Latch status
- Set point value
- Deadband value
- Min/Max values
- Fault codes

Set point & deadband: User-configured, 100% adjustable over entire sensor operating range

Memory: Programming and data protected by non-volatile EEPROM

Effective transmission distance 2,000 feet at rated voltage for 2W2D/2X2D, 2W4D/2X4D and 2W3A/2X3A

Sensors:

Gauge Pressure – 316L stainless steel, welded diaphragm, 1/2" NPT (female) process connection, micro-machined piezo-resistive strain gauge silicon element, 0.25 ml silicone oil fill.
Maximum media temperature: -40 to 257°F (-40 to 125°C)

Differential Pressure - 316L stainless steel, welded diaphragms, 1/4" NPT (male) process connections, piezo-resistive strain gauge silicon element, silicone oil fill.
Maximum media temperature: -40 to 257°F (-40 to 125°C)

Temperature – 316 stainless steel 0.25" OD sheath containing a 100 ohm 4-wire platinum RTD element available with epoxy fill (local low temp) or powder fill (remote high temp).
Media temperature limits:
-328 to 1000°F, intermittent to 1100°F (-200 to 538°C, int. to 593°C) for TH and TT ranges
-40 to 500°F (-40 to 260°C) for TR and TL ranges

Vacuum: All pressure sensors withstand deep vacuum with no calibration effects. Vacuum ranges are not currently available.

EMI/RFI: Compliance to CE EMC requirements: EN 55011, EN 61326, EN 61000-6-2

Emission:
EN 55011 class A; Radiated emissions
EN 61000-3-2 Harmonic Current Emissions

Immunity:
EN 61000-3-3 Immunity to Voltage Fluctuations and Flicker
EN 61000-4-2 Immunity to Electrostatic Discharge
EN 61000-4-3 Immunity to Continuous Radiated Disturbances
EN 61000-4-4 Immunity to Electrical Fast Transients
EN 61000-4-5 Immunity to Surges
EN 61000-4-6 Immunity to Continuous Conducted Disturbances
EN 61000-4-8 Immunity to Power Frequency Magnetic Field
EN 61000-4-11 Immunity to Voltage Dips and Interruptions

Weight:
2W, 4W, 8W: 1.5 - 1.9 lbs (0.7 - 0.9 kg)
2X, 4X, 8X: 4.5 - 6.0 lbs (2.0 - 2.7 kg)

Shock: per MIL-STD-810G method 516.6 – when device is subjected to 15 g (10 mSec) and 40 g (6 mSec); 3 drops/axis
Effects: less than +/- 0.40% of range

Vibration: per IEC 61298-3 (field and pipeline applications with high vibration level, 10-1000 Hz range, 0.014" displacement peak amplitude, 5 g acceleration amplitude)
Effects: less than +/- 0.40% of range

HOW TO ORDER

Build a part number by selecting the model, sensor and options from the tables below.

Model	Description	Min. Load	Zone			Division	
			0	1	2	1	2
2W2D00	2-wire discrete input powered, 12-30 VDC, 40 mA switch (24 VDC 2-Wire)	2.3 mA	✓*	✓*	✓	✓*	✓
2X2D00				✓	✓	✓	✓
2W4D00	2-wire discrete input powered, 30-50 VDC, 40 mA switch (48 VDC 2-Wire)	2.0 mA					
2X4D00				✓	✓	✓	✓
2W3A00	2-wire discrete input powered, 90-130 VAC or VDC, 100 mA switch (115 VAC 2-Wire)	3.75 mA			✓		✓
2X3A00				✓	✓	✓	✓
2WLP41	2-wire loop-powered or 24V external powered, 4-20 mA output, 0-140 VAC/VDC, 0.6 A SSR switching	0 mA			✓		✓
2XLP41				✓	✓	✓	✓
2WLP43	2-wire loop-powered or 24V external powered, 4-20 mA output, 0-280 VAC/VDC, 0.3 A SSR switching	0 mA			✓		✓
2XLP43				✓	✓	✓	✓
4W3A01	Supply voltage – 90-130 VAC, 24-280 VAC, 10 A SSR switching	150 mA			✓		✓
4X3A01				✓	✓	✓	✓
8W2D42	Supply voltage – 10-30 VDC, SW1 & SW2: 75-250 VAC, 1.5 A SSR, 4-20 mA output	SW1: 50 mA SW2: 50 mA			✓		✓
8X2D42				✓	✓	✓	✓
8W2D44	Supply voltage – 10-30 VDC, SW1: 75-250 VAC, 1.5 A SSR, SW2: 0-140 VAC/VDC, 0.6 A SSR, 4-20 mA output	SW1: 50 mA SW2: 0 mA			✓		✓
8X2D44				✓	✓	✓	✓
8W2D45	Supply voltage – 10-30 VDC, SW1 & SW2: 0-140 VAC/VDC, 0.6 A SSR, 4-20 mA output	SW1: 0 mA SW2: 0 mA			✓		✓
8X2D45				✓	✓	✓	✓

* Suitable safety barrier required

Sensor	Pressure Operating Range[1] + display resolution					Maximum Over Range[2]	
Gauge pressure, piezo-resistive strain gage, silicone oil fill, 316L stainless wetted materials, 1/2" NPT (female) process connection, displayed as shown.							
P10	0-5.00 psig	138.5 "wc	344,7 mbar	34.47 KPa	0.352 kg/cm^2	10 psig	690 mbar
P11	0-15.00 psig	415.5 "wc	1034 mbar	103.4 KPa	1.055 kg/cm^2	30 psig	2068 mbar
P12	0-30.00 psig	831.1 "wc	2068 mbar	206.8 KPa	2.109 kg/cm^2	60 psig	4137 mbar
P13	0-50.00 psig	1385 "wc	3447 mbar	344.7 KPa	3.516 kg/cm^2	100 psig	6895 mbar
P14	0-100.0 psig	2770 "wc	6895 mbar	689.5 KPa	7.031 kg/cm^2	200 psig	13,8 bar
P15	0-300.0 psig	NA	20,68 bar	2068 KPa	21.09 kg/cm^2	600 psig	41,4 bar
P16	0-500.0 psig	NA	34,47 bar	3447 KPa	35.16 kg/cm^2	1000 psig	68,9 bar
P17	0-1000 psig	NA	68,95 bar	6895 KPa	70.31 kg/cm^2	2000 psig	137,9 bar
P18	0-3000 psig	NA	206,8 bar	20.68 MPa	210.9 kg/cm^2	6000 psig	413,7 bar
P19	0-4500 psig	NA	310,3 bar	31.03 MPa	316.4 kg/cm^2	9000 psig	620,5 bar
P20*	0-6000 psig	NA	413,7 bar	41.37 MPa	421.9 kg/cm^2	12000 psig	827,4 bar

*** (P20 range available on 2X, 4X and 8X models only)**

HOW TO ORDER CONT.

Sensor	Pressure Operating Range[1] + display resolution				
Differential pressure, piezo-resistive strain gage, silicone oil fill, 316L stainless wetted materials, 1/4" NPT (male) process connections, displayed as shown.					
K10	0-5.00 psid	138.5 "wc	344,7 mbar	34.47 KPa	0.352 kg/cm^2
K11	0-50.0 psid	1385 "wc	3447 mbar	344.7 KPa	3.516 kg/cm^2
K12	0-100.0 psid	2770 "wc	6895 mbar	689.5 KPa	7.031 kg/cm^2
K13	0-200.0 psid	NA	13,8 bar	1379 KPa	14.10 kg/cm^2

Sensor	Maximum Over Range[2]		Maximum Working Pressure[3]	
K10	10 psid	690 mbar	50 psig	3447 mbar
K11	100 psid	6895 mbar	500 psig	34,47 bar
K12	200 psid	13,8 bar	1500 psig	103,4 bar
K13	400 psid	27,6 bar	1500 psig	103,4 bar

1 - The pressure range that the sensor will perform within specified tolerances.
2 - The maximum pressure that can be applied without affecting sensor performance.
3 - The maximum pressure that can be applied to both ports simultaneously without affecting sensor performance. Pressure on the "H" sensor port must be ≥ pressure on the "L" sensor port.

Sensor	Temperature Range	Description (see page 13 for sensor drawings)
Temperature – 4-wire RTD, 100 Ω platinum, DIN 0.00385, 0.25" OD sensor sheath, 316 stainless steel construction		
TL1	-40 to 450°F/-40 to 232°C (See page 11 fitting options)	Local (stem) mounted rigid to enclosure, 4" sheath length
TL2		Local (stem) mounted rigid to enclosure, 6" sheath length
TL3		Local (stem) mounted rigid to enclosure, 10" sheath length
TR1		Remote mounted, 6" sheath, 6' fixed-length Teflon® extension (2.5" sheath and MI extension for explosion-proof and ATEX models)
TRC*		Remote mounted, 6" sheath, 1' to 30' in 1' increments variable Teflon® extension length MUST BE SPECIFIED. Consider Option M006. (2.5" sheath and MI extension for explosion-proof and ATEX models)
TH1	-40 to 1000°F/-40 to 538°C (See page 11 fitting options)	Remote mounted, 2.5" sheath, 6' MI fixed extension length
THC*		Remote mounted, 2.5" sheath, 2W2D, 2X2D, 2W4D, 2WLP, 2XLP, 8W2D and 8X2D models only, 1' to 30' MI extension length MUST BE SPECIFIED. USE OPTION W074 ONLY.
TC1	-300 to 200°F/-184 to 93°C (See page 11 fitting options)	Remote mounted, 2.5" sheath, 6' MI fixed extension length
TCC*		Remote mounted, 2.5" sheath, 2W2D, 2X2D, 2W4D, 2WLP, 2XLP, 8W2D & 8X2D models only, 1' to 30' MI extension length MUST BE SPECIFIED. USE OPTION W074 ONLY.
TTC	-40 to 900°F/-40 to 482°C (Example: TTC–NUN6–L 10.5)	Local (stem) spring-loaded mount, NUN connection lengths: 4" – 10" in 1" increments, variable sheath (L) length up to 60", BOTH MUST BE SPECIFIED, available on 2X, 4X and 8X models only. Refer to drawing on page 13. Thermowell required, see page 11.
TU1	-300 to 200°F/-184 to 93°C	**User-supplied sensor** for explosion-proof models only must be a 3-wire or 4-wire RTD, 100 Ω platinum, DIN 0.00385 (response curve for RTD). Choose range expected for the application. See below to order replacement sensors. No sensor is included with TU1 - TU3 ranges. For 2X3A and 4X3A models with remote sensors, extension length must be limited to 6'.
TU2	-40 to 450°F/-40 to 232°C	
TU3	-40 to 1000°F/ -40 to 538°C	
Thermowells and fittings are shown on page 11. To order spares and **replacement temperature sensor assemblies, available only on explosion-proof models**, provide the "TA#:" number from the product nameplate. Example: TA#: 62128723		

*Custom extension lengths are not available with 2X3A or 4X3A models.

OPTION CODES

M006 Add armor to temperature sensor Teflon® extension (2W, 4W, 8W, TR1 and TRC models only)

M201 Factory programmed set point, deadband and switch mode
(all 3 settings are required at time of ordering - see example below)

Set Point[1]	Deadband[1]	Switch Mode
40.00	25.00	Open on rise

M202 Factory programmed set point, deadband and switch mode for two switches
(all 6 settings are required at time of ordering - see example below)

Switch	Set Point[1]	Deadband[1]	Switch Mode
1	040.3	001.5	Open on fall
2	050.0	005.0	Close on rise

M270 Display units, degrees C for temperature models

M275 Display units, inches of water column

M276 Display units, bar or mbar

M277 Display units, kPa or MPa

M278 Display units, kg/cm2

M395 Flameproof compliance Ex d per Korea Occupational Safety and Health Agency (KOSHA) for 2X, 4X & 8X models only

M406 Compliance per Russian Gosgortechnadzor (N/A on 2W4D)

M419 ATEX approval (2W2D, 2W3A, 2WLP and 8W2D models only. N/A on 2W4D and 4W3A. Standard on explosion-proof models. 2.5" sheath and MI extension for TR1 and TRC with this option. See page 9).

M444 Paper tag

M446 Stainless steel tag

M449 Mounting bracket for pipe or wall. Use part number 6361-704 if ordered separately. See page 12 for additional information.

M454 Mounting adapter plate kit 62169-40 (use to match JIC form bolt pattern on 2W, 4W and 8W models only)

M550 Oxygen cleaning service

M905 1/2" NPT female conduit added to right wall of enclosure for 2W2D, 2W3A, 2W4D and 4W3A models only

M906 1/2" NPT female conduit moved to bottom wall of enclosure for 2W2D, 2W3A, 2W4D and 4W3A models only, approvals N/A, see option M449, not available with differential pressure (K) sensors

M907 1/2" NPT female conduit moved from right to top wall of enclosure for 2WLP and 8W2D models only, approvals N/A, see option M449

W073 1/2" NPT male compression fitting for use with all TL and TR sensors, see page 8 for additional information

W074 1/2" NPT male union connector for use with all TR, TH and TC sensors for 2W2D, 2X2D, 2W4D, 2WLP, 2XLP, 8W2D and 8X2D models

W080 1/2" NPT male union connector for use with TR1, TH1 and TC1 sensors for 2W3A, 2X3A, 4W3A and 4X3A models

W930 1/2" NPT male to G1/2 male adapter for use with gauge pressure sensors P10-P20. Use part number 6361-762 if ordered separately.

W932 1/4" NPT female to G1/2 male adapter for use with differential pressure sensors K10-K13. Use part number 6361-763 if ordered separately (2 required)

6361-752 Replacement cover assembly for 2X, 4X and 8X models only

[1]Note: Four numbers must be entered for each set point and deadband. Please refer to the display resolution chart on pages 8 & 9 for the correct number of decimal places allowed for the sensor range and units of measure selected.

TEMPERATURE SENSORS AND FITTINGS COMPATIBILITY CHART

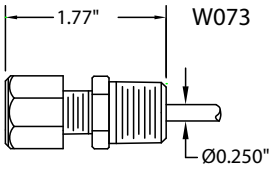

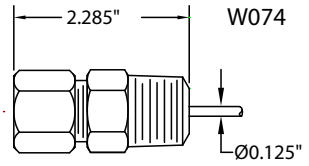

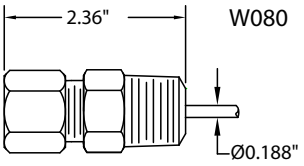

Model (Table 1)	**W073** 1/2" NPT compression fitting with ferrule to fit 0.25" sensor sheath	**W074** 1/2" NPT union connection to fit 0.125" sensor extension cable	**W080** 1/2" NPT union connection to fit 0.188" sensor extension cable
2W2D, 2W4D, 2WLP, 8W2D	TLx, TRx	TRx, THx, TCx	NA
2W2D, 2WLP, 8W2D (w/ ATEX option - M419)	TLx	TRx, THx, TCx	NA
2W3A, 4W3A	TLx, TRx	TRx	TH1, TC1
2W3A (w/ ATEX option - M419)	TLx	NA	TR1, TH1, TC1
2X2D, 2X4D, 2XLP, 8X2D	TLx	TRx, THx, TCx	NA
2X3A, 4X3A	TLx	NA	TR1, TH1, TC1

*The sensor extension is mineral insulated (MI) when ATEX option M419 is specified.

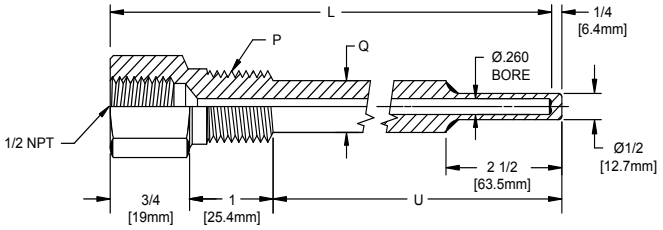

Fittings for Thermowells (Table 2)

Thermowell UE Part #	Length (L) Inches	P (NPT)	Q	U	Local Temperature Sensors w/ 0.25" Sensor Sheath[1]			Remote Temperature Sensors w/ Teflon® Cable	Remote Temperature Sensors w/ 0.125" Diameter MI Cable[1]	Remote Temperature Sensors w/ 0.188" Diameter MI Cable[1]
					TL1 (4")	TL2 (6")	TL3 (10")	TR	TR, TH & TC	TR, TH & TC
1S260 L4-316	4	1/2	5/8	2.5	NA	W073	W073	W073	W074	W080
1S260 L4.5-316	4.5	1/2	5/8	3	NA	W073	W073	W073	W074	W080
1S260 L5.5-316	5.5	1/2	5/8	4	NA	NA	W073	W074	W074	W080
1S260 L6-316	6	1/2	5/8	4.5	NA	NA	W073	W074	W074	W080
1S260 L6.5-316	6.5	1/2	5/8	5	NA	NA	W073	W074	W074	W080
1S260 L9-316	9	1/2	5/8	7.5	NA	NA	NA	W074	W074	W080
1S260 L9.5-316	9.5	1/2	5/8	8	NA	NA	NA	W074	W074	W080
1S260 L12-316	12	1/2	5/8	10.5	NA	NA	NA	W074	W074	W080
1S260 L15-316	15	1/2	5/8	13.5	NA	NA	NA	W074	W074	W080
1S260 L18-316	18	1/2	5/8	16.5	NA	NA	NA	W074	W074	W080
1S260 L24-316	24	1/2	5/8	22.5	NA	NA	NA	W074	W074	W080
2S260 L4-316	4	3/4	3/4	2.5	NA	W073	W073	W073	W074	W080
2S260 L6-316	6	3/4	3/4	4.5	NA	NA	W073	W074	W074	W080
2S260 L9-316	9	3/4	3/4	7.5	NA	NA	NA	W074	W074	W080
2S260 L12-316	12	3/4	3/4	10.5	NA	NA	NA	W074	W074	W080
2S260 L15-316	15	3/4	3/4	13.5	NA	NA	NA	W074	W074	W080
2S260 L18-316	18	3/4	3/4	16.5	NA	NA	NA	W074	W074	W080
2S260 L24-316	24	3/4	3/4	22.5	NA	NA	NA	W074	W074	W080

Note: Reference (Table 1) to determine sensor sheath diameter or the diameter of the MI cable by model

ENCLOSURE AND SENSOR DETAILS

2X, 4X and 8X models
(Shown with gauge pressure sensor)

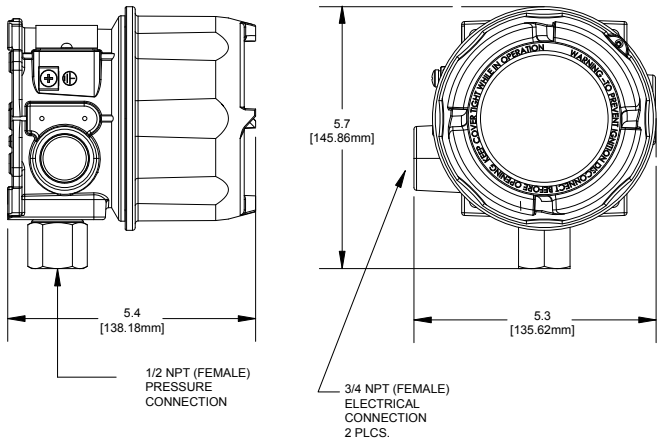

2W, 4W and 8W models
(Single conduit shown with gauge pressure sensor)

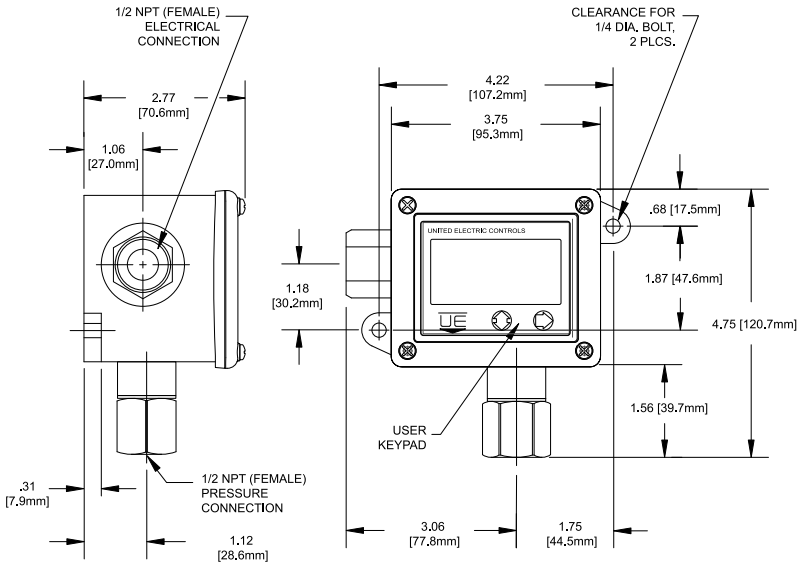

Wall or Pipe Mounting Bracket
Option M449 or part #6361-704

WARNING: The One Series unit must be secured to a wall or pipe. *Do not use the sensor to support the instrument.* Contact UE Technical Support at 617-923-6977 or email at techsupport@ueonline.com.

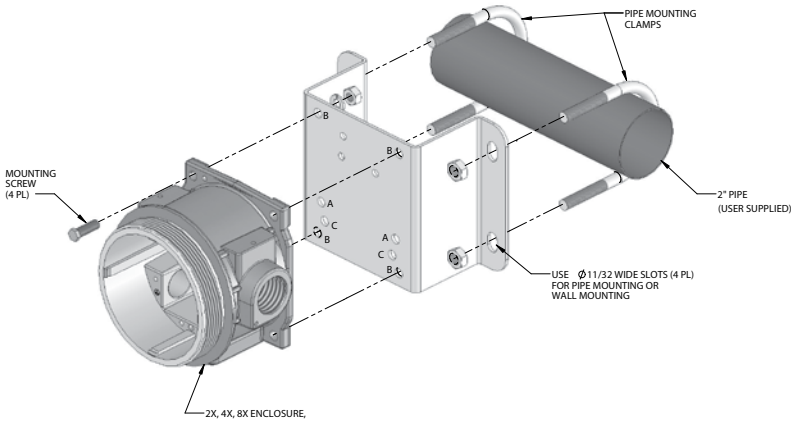

DIMENSIONAL DRAWINGS (CONTINUED)

TEMPERATURE SENSORS

TL1-TL3 Sensors

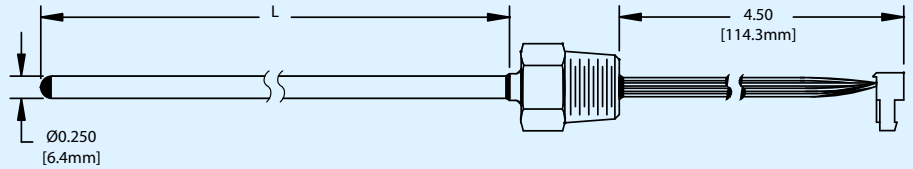

TR1 and TRC sensors for all 2W, 4W and 8W models without ATEX approval

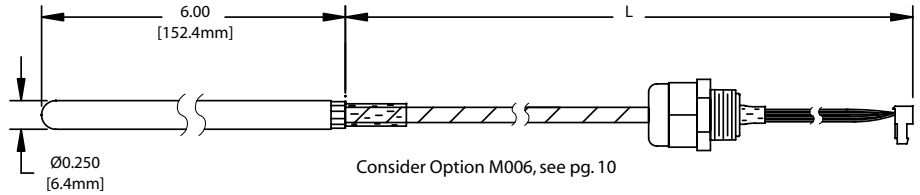

Consider Option M006, see pg. 10

Remote sensors for 2X, 8X, 2W and 8W with ATEX (excludes 2X3A an 2W3A)

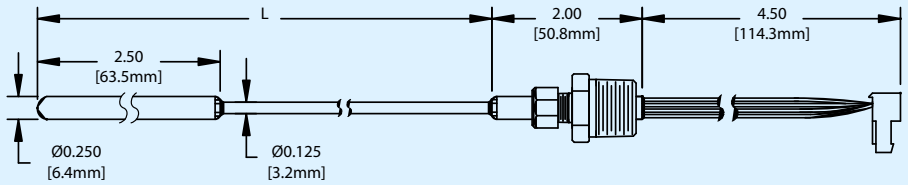

Remote sensors for 2X3A, 4X3A and 2W3A with ATEX

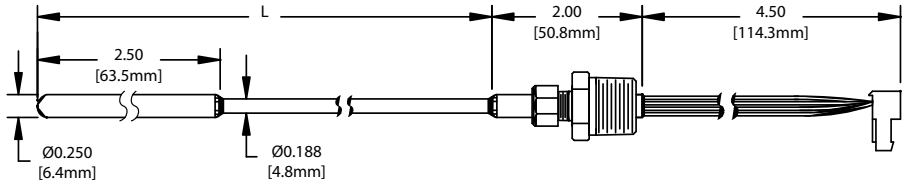

TTC Sensors (For explosion-proof models only)

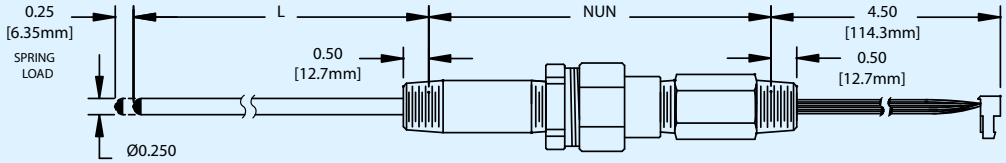

L=60" max., NUN=4" to 10" in 1" increments

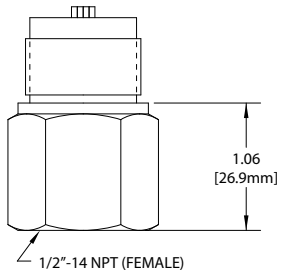

GAUGE
PRESSURE SENSORS

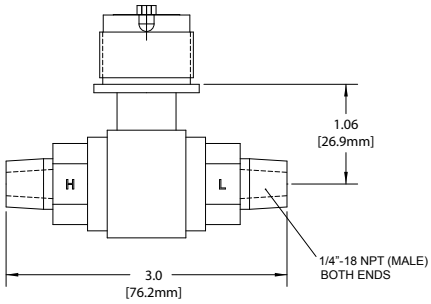

DIFFERENTIAL
PRESSURE SENSORS

Approvals & Ratings

Model	N. America UL Listed, cUL Certified UL50, 508, 913, 1604 & 60079-15; CSA No. E79-0, E79-11, E60079-15, C22.2 No. 14, 157 & 213 File#E226592	Europe (select option M419) (ATEX Directive 94/9/EC) EN 60079-0, 60079-15, 50281-1-1, 50020 EMC Directive: refer to page 7	Australia IECEx Scheme	Russia (select option M406) Gosgortechnadzor GOST R 51330.0, 5.1330.1, 51330.10, and 51330.14	Korea (select option M395) Korean Occupational Safety and Health Agency Complies to Korean article 34 Industrial Safety and Health Law
2W2D Intrinsically safe when used with a safety barrier	Class I, Div 1, Groups A, B, C & D Class II, Div 1, Groups E, F & G Class III Class I, Zone 0, AEx ia IIC T5 Class I, Zone 0, Ex ia IIC T5 Per UE drawing # A-62174-19	II 1 G EEx ia IIC T5 II 1 D T+90˚C, IP66 T_{AMB} = -40˚C to +60˚C Per UE drawing # A-62174-20 Cert# DEMKO 03 ATEX 0322281X	N/A	0ExiaIICT5 T_{AMB} = -40˚C to +85˚C Cert# ROSS US.GB05. Bo2933	N/A
2W2D Non-incendive	Class I, Div 2 Groups A, B, C & D Class II, Div 2 Groups F & G Class III Class I, Zone 2, AEx nC IIC T5 Class I, Zone 2 Ex nC IIC T5	II 3 G EEx nL IIC T5 II 3 D T+90˚C, IP66 T_{AMB} = -40˚C to +60˚C Cert# DEMKO 03 ATEX 0322281X	N/A	ExnLIICT5 T_{AMB} = -40˚C to +85˚C Cert# ROSS US.GB05. Bo2933	N/A
2W3A Non-incendive	Class I, Div 2 Groups A, B, C & D Class II, Div 2 Groups F & G Class III Class I, Zone 2, AEx nC IIC T5 Class I, Zone 2 Ex nC IIC T5	II 3 G Ex nL IIC T5 II 3 D T+90˚C, IP66 T_{AMB} = -40˚C to +60˚C Cert# DEMKO 08 ATEX 0726838X	N/A	ExnLIICT5 T_{AMB} = -40˚C to +85˚C Cert# ROSS US.GB05. Bo2933	N/A
2W4D	N/A	N/A	N/A	N/A	N/A
2WLP Non-incendive	Class I, Div 2 Groups A, B, C & D Class II, Div 2 Groups F & G Class III Class I, Zone 2, AEx nC IIC T4 Class I, Zone 2 Ex nC IIC T4	II 3 G Ex nL IIC T4 II 3 D T+110˚C, IP66 T_{AMB} = -40˚C to +60˚C Cert# DEMKO 08 ATEX 0726838X	N/A	ExnLIICT4 T_{AMB} = -40˚C to +80˚C Cert# ROSS US.GB05. Bo2933	N/A
4W3A Non-incendive	Class I, Div 2 Groups A, B, C & D Class II, Div 2 Groups F & G Class III Class I, Zone 2, AEx nC IIC T4 Class I, Zone 2 Ex nC IIC T4	N/A	N/A	2ExnCIICT4 T_{AMB}= -40˚C to +70˚C Cert# ROSS US.GB05. Bo2933	N/A
8W2D Non-incendive	Class I, Div 2 Groups A, B, C & D Class II, Div 2 Groups F & G Class III Class I, Zone 2, AEx nC IIC T4 Class I, Zone 2 Ex nC IIC T4	II 3 G Ex nL IIC T4 II 3 D T+110˚C, IP66 T_{AMB} = -40˚C TO +60˚C Cert# DEMKO 08 ATEX 0726838X	N/A	ExnLIICT4 T_{AMB} = -40˚C to +80˚C Cert# ROSS US.GB05. Bo2933	N/A
Model	**N. America** UL Listed, cUL Certified UL 50, 50E, 1203, UL/CSA 61010-1, 60079-0, 60079-1, CSA C22.2 No. 25,30 File#E226592	**Europe** (ATEX Directive 94/9/EC) EN 60079-0, 60079-1, 61241-0, 61241-1	**Australia** IECEx Scheme IEC 60079-0, 60079-1	**Russia** (select option M406) Gosgortechnadzor	**Korea** (select option M395) Korean Occupational Safety and Health Agency
2X2D, 2X3A, 2X4D 2XLP, 4X3A, 8X2D Explosion-Proof/ Flameproof	Class I, Div 1, Groups A, B, C & D Class II, Div 1, Groups E, F & G Class III Class I, Zone 1, AEx nC IIC T3/T5** Class I, Zone 1 Ex nC IIC T5	II 2 G Ex d IIC T3/T5** II 2 D Ex tD A21 IP66 T+90˚C Cert# DEMKO 09 ATEX 0813748X	Ex d IIC T3/T5** Cert# IECEx UL 08.0017X	1ExdIIC T3/T5** 2X2D, 2X3A and 2X4D: -40˚C ≤ T_{AMB} ≤ +85˚C 2XLP + 8X2D: -40˚C ≤ T_{AMB} ≤ +80˚C 4X3A: -40˚C ≤ T_{AMB} ≤ +70˚C Cert# ROSS US.GB05. Bo2933	Ex d IIC T5/T3 2X2D, 2X3A and 2X4D -40˚C ≤ T_{AMB} ≤ +85˚C 2XLP and 8X2D -40˚C ≤ T_{AMB} ≤ +80˚C 4X3A -40˚C ≤ T_{AMB} ≤ +75˚C

**T3 for pressure sensor ranges P10-P16 only. T5 for all other models.
Specifications subject to change without notice.

ADDITIONAL PRODUCTS FROM UE

12 Series – Electro-Mechanical Pressure and Temperature Switch

- Dual seal compliant to ANSI/ISA 12.27.01
- Compact, cylindrical 316 stainless steel enclosure
- Hermetically-sealed SPDT or DPDT switch output
- Explosion-proof
- Snap-acting belleville spring mechanism to enhance vibration resistance and set point stability
- Pressure ranges to 12,500 psi; DP working pressure ranges to 2500 psid; temperature ranges to 650°F

DUAL SEAL CERTIFIED

ATEX

120 Series – Electro-Mechanical Pressure and Temperature Switch

- Explosion-proof line of pressure, differential pressure, and temperature models with wide selection of ranges, sensors and pressure connections
- UL, cUL, ATEX certified for hazardous locations
- Single or dual switch outputs
- Welded stainless steel diaphragm pressure sensor
- Internal or external set point adjustment

ATEX

TX200 Series HART® & ASIC Pressure Transmitter

- Smart TX200H offers HART 7 communication and 4-20 mA output
- TX200H 10:1 range turndown helps reduce inventory
- ASIC based TX200 offers 4-20 mA output or 1-5 VDC or 0-10 VDC output
- Rugged 316 stainless steel construction, welded and hermetically sealed
- Wide variety of process connections available for pressure ranges from 0 to 15 psi
- Up to 0 to 25,000 psi

HART COMMUNICATION PROTOCOL

ATEX

117 Series – Electro-Mechanical Pressure and Temperature Switch

- Single switch for corrosive and hazardous division 2 locations
- Compact pressure, differential pressure and temperature models
- Hermetically-sealed SPDT and DPDT switch output
- Epoxy-coated, weather-tight design houses stainless steel internal construction
- Convenient terminal block wiring

Temperature Sensors

Rugged RTDs and thermocouples for process and energy applications, available with Nema 4X and explosion-proof heads to match heat-trace, turbine, combustion, and stack-emission applications

RECOMMENDED PRACTICES AND WARNINGS

United Electric Controls Company recommends careful consideration of the following factors when specifying and installing UE pressure and temperature units. Before installing a unit, the Installation and Maintenance instructions provided with unit must be read and understood.

- To avoid damaging unit, proof pressure and maximum temperature limits stated in literature and on nameplates must never be exceeded, even by surges in the system. Operation of the unit up to maximum pressure or temperature is acceptable on a limited basis (e.g., start-up, testing) but continuous operation must be restricted to the designated adjustable range. Excessive cycling at maximum pressure or temperature limits could reduce sensor life.
- A back-up unit is necessary for applications where damage to a primary unit could endanger life, limb or property. A high or low limit switch is necessary for applications where a dangerous runaway condition could result.
- The adjustable range must be selected so that incorrect, inadvertent or malicious setting at any range point cannot result in an unsafe system condition.
- Install unit where shock, vibration and ambient temperature fluctuations will not damage unit or affect operation. When applicable, orient unit so that moisture does not enter the enclosure via the electrical connection. When appropriate, this entry point should be sealed to prevent moisture entry.
- Unit must not be altered or modified after shipment. Consult UE if modification is necessary.
- Monitor operation to observe warning signs of possible damage to unit, such as drift in set point or faulty display. Check unit immediately.
- Preventative maintenance and periodic testing is necessary for critical applications where damage could endanger property or personnel.
- Electrical ratings stated in literature and on nameplate must not be exceeded. Overload on a switch can cause damage, even on the first cycle. Wire unit according to local and national electrical codes, using wire size recommended in installation sheet.
- Do not mount unit in ambient temp. exceeding published limits.

LIMITED WARRANTY

Seller warrants that the product hereby purchased is, upon delivery, free from defects in material and workmanship and that any such product which is found to be defective in such workmanship or material will be repaired or replaced by Seller (Ex-works, Factory, Watertown, Massachusetts. INCOTERMS); provided, however, that this warranty applies only to equipment found to be so defective within a period of 36 months from the date of manufacture by the Seller. Seller shall not be obligated under this warranty for alleged defects which examination discloses are due to tampering, misuse, neglect, improper storage, and in any case where products are disassembled by anyone other than authorized Seller's representatives. EXCEPT FOR THE LIMITED WARRANTY OF REPAIR AND REPLACEMENT STATED ABOVE, SELLER DISCLAIMS ALL WARRANTIES WHATSOEVER WITH RESPECT TO THE PRODUCT, INCLUDING ALL IMPLIED WARRANTIES OF MERCHANTABILITY OR FITNESS FOR ANY PARTICULAR PURPOSE.

LIMITATION OF SELLER'S LIABILITY

SELLER'S LIABILITY TO BUYER FOR ANY LOSS OR CLAIM, INCLUDING LIABILITY INCURRED IN CONNECTION WITH (I) BREACH OF ANY WARRANTY WHATSOEVER, EXPRESSED OR IMPLIED, (II) A BREACH OF CONTRACT, (III) A NEGLIGENT ACT OR ACTS (OR NEGLIGENT FAILURE TO ACT) COMMITTED BY SELLER, OR (IV) AN ACT FOR WHICH STRICT LIABILITY WILL BE INPUTTED TO SELLER, IS LIMITED TO THE "LIMITED WARRANTY" OF REPAIR AND/OR REPLACEMENT AS SO STATED IN OUR WARRANTY OF PRODUCT. IN NO EVENT SHALL THE SELLER BE LIABLE FOR ANY SPECIAL, INDIRECT, CONSEQUENTIAL OR OTHER DAMAGES OF A LIKE GENERAL NATURE, INCLUDING, WITHOUT LIMITATION, LOSS OF PROFITS OR PRODUCTION, OR LOSS OR EXPENSES OF ANY NATURE INCURRED BY THE BUYER OR ANY THIRD PARTY.

UE specifications subject to change without notice.

U.S. SALES OFFICES

United Electric Controls
31 Old Stage Road
Hampton Falls, NH 03844
Phone: 617-899-1132
email: northeastsales@ueonline.com

United Electric Controls
28 N. Wise Ave.
Freeport, IL 61032
Phone: 815-341-2588
email: midwestsales@ueonline.com

United Electric Controls
1022 Vineyard Drive
Conyers, GA 30013
Phone: 770-335-9802
email: southeastsales@ueonline.com

United Electric Controls
5829 Grazing Court
Mason, OH 45040
Phone: 513-535-5486
email: midatlanticsales@ueonline.com

United Electric Controls
102 Salazar Court
Clayton, CA 94517
Phone: 925-408-5997
email: westcoastsales@ueonline.com

United Electric Controls
27 Summit Terrace
Sparta, NJ 07871
Phone: 973-271-2550
email: easternsales@ueonline.com

United Electric Controls
33018 Weatherby Court
Fulshear, Texas 77441
Phone: 832-457-6138
email: southwestsales@ueonline.com

CANADA

EASTERN
68 Mosley Crescent
Brampton, Ontario
Canada L6Y 5C8
Phone: 905-455-5131
FAX: 905-455-5131

INTERNATIONAL OFFICES

CHINA

United Electric Controls, *Shanghai Office*
Room 1011, 10th Flr,
Huai Hai Zhonghua Building
No. 885, Renmin Road, Luwan District
Shanghai 200010, P.R. China
Phone: +8621-6255 8059
email: chinasales@ueonline.com

United Electric Controls, *Beijing Office*
Room 1006, Jainhao International Bldg.
Block D, No. 116
Zizhuyuanlu, Haidian District
Beijing, China 100089
Phone & Fax: +86-10-5893-0551
email: beijingsales@ueonline.com

EUROPE

United Electric Controls
05-806 Komorow
Kujawska 5, Poland
Phone: +48 22 499 4804
email: easterneuropesales@ueonline.com

INDIA

United Electric
#402, Aries Avenue - 1
United Colony, Sama, Baroda
Baroda (Gujarat), India
Phone: +91 (-265) -2788654
email: indiasales@ueonline.com

ASIA-PACIFIC

United Electric Controls, Far East
No. 1-2-2, 2nd Floor
Jalan 4/101C
Cheras Business Centre
56100 Kuala Lumpur, Malaysia
Phone: 603-9133-4122
email: asiapacific@ueonline.com

MEXICO

United Electric Controls
Privada Fernando San Pedro 305
Col El Naranjal 89349
Tampico, Tamaulipas Mexico
Phone: +52 833-116-7637
email: latinamericasales@ueonline.com

RUSSIA & SCANDINAVIA

United Electric Controls, Moscow
Elninskaya str., 15-140
Moscow, 121552 Russia
Phone: +7 (495) 792-88-06
email: russiansales@ueonline.com

UNITED ELECTRIC CONTROLS

180 Dexter Avenue, P.O. Box 9143
Watertown, MA 02471-9143 USA
Telephone: 617 926-1000 Fax: 617 926-2568
http://www.ueonline.com

CP05125000